HYBRID STEPPING MOTOR MOD. *42HS34MF201BA-01*

☐ COLORS OF LEAD WIRES

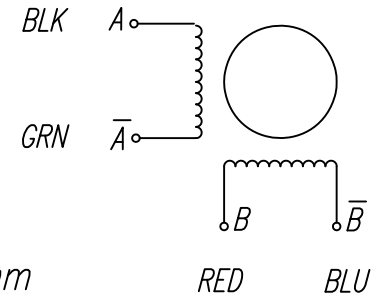

☐ DIMENSIONS *unit=mm*

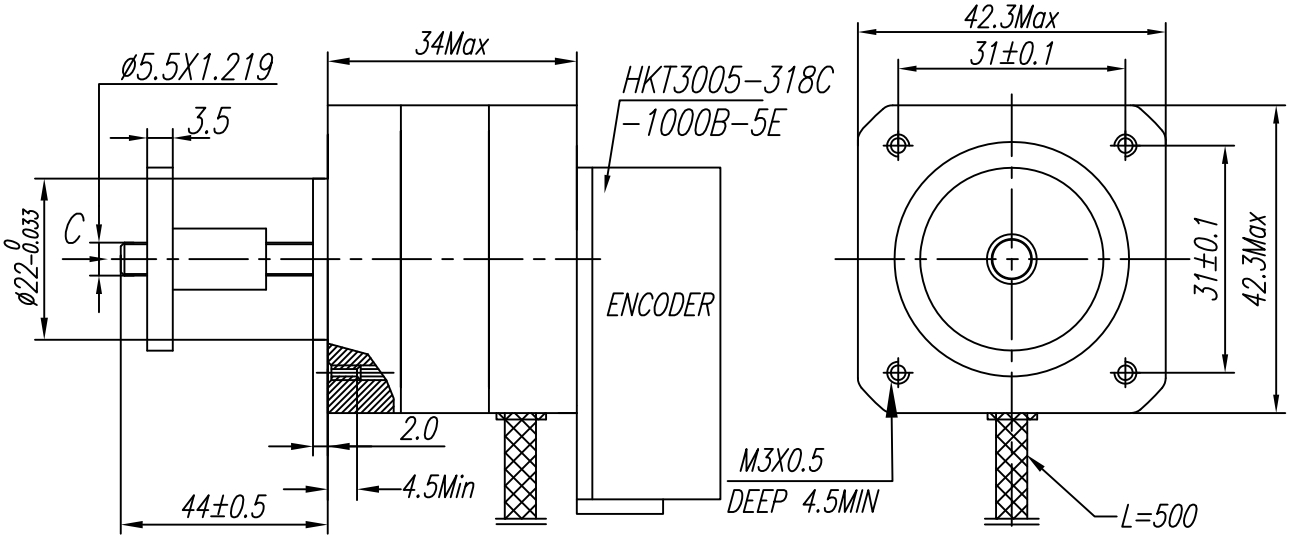

☐ SPECIFICATIONS

PHASE	2 PHASE	COMMENT
STEP ANGLE	0.9±5% °/STEP	EXTERNAL LINEAR NUT
VOLTAGE	2.8 V	
CURRENT	1.33 A/PHASE	
RESISTANCE	2.1 ±10% Ω/PHASE	
INDUCTANCE	3.5±20% mH/PHASE	
HOLDING TOGQUE	21 N.cm	
INSULATION CLASS	B	
LEAD STYLE	AWG26 UL1007	
LINEAR TRAVEL PER STEP	0.006095	
EXTERNAL DIAMETER	ø5.5	
PITCH OF SCREWS	1.219	

C VIEW

1 : 1

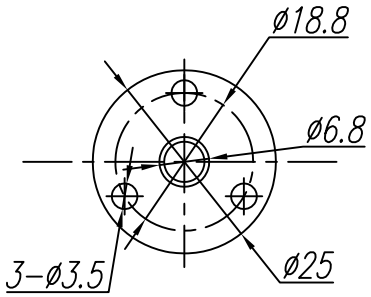

DESIGN			STD.			SPECIFICATION	Motion Solutions, Inc.
CHECK			APPROVE				
PROC.						SIG: NR	PAGE:

HYBRID STEPPING MOTOR MOD. *42HS34DF703*

☐ COLORS OF LEAD WIRES

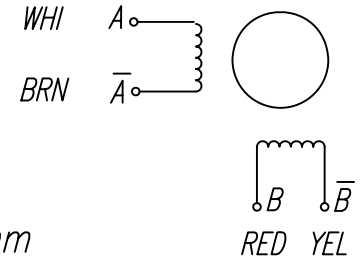

☐ DIMENSIONS unit=mm

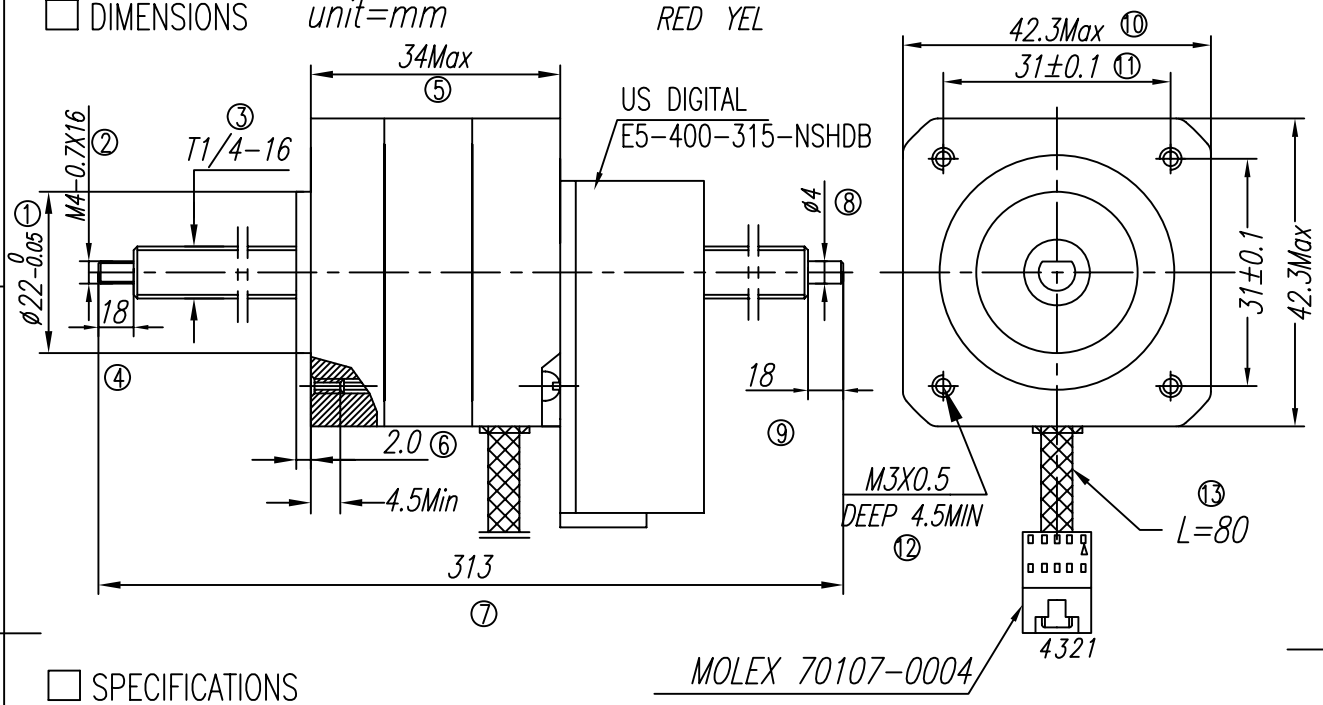

☐ SPECIFICATIONS

			COMMENT
PHASE	2	PHASE	TERMINATION:
STEP ANGLE	1.8±5%	°/STEP	Molex Connector Male:
VOLTAGE	4.89	V	#70107-0004 5 position
CURRENT	0.67	A/PHASE	Molex Contacts:
RESISTANCE	7.3 ±10%	Ω/PHASE	#16-02-0077(reel) or
INDUCTANCE	10 ±20%	mH/PHASE	#16-02-0109 (bag)
HOLDING TOGQUE	25	N.cm	Phase A+ Pin#1 White
DETENT TORQUE		g.cm	Phase A- Pin#2 Brown
INSULATION CLASS	B		Phase B+ Pin#3 Red
LEAD STYLE	AWG26 UL1061		Phase B- Pin#4 Yellow
Travel per step	0.015875±		N/C Pin#5
	0.00002mm		

DESIGN			STD.			SPECIFICATION	Motion Solutions, Inc.
CHECK			APPROVE				
PROC.						SIG: NR	PAGE: